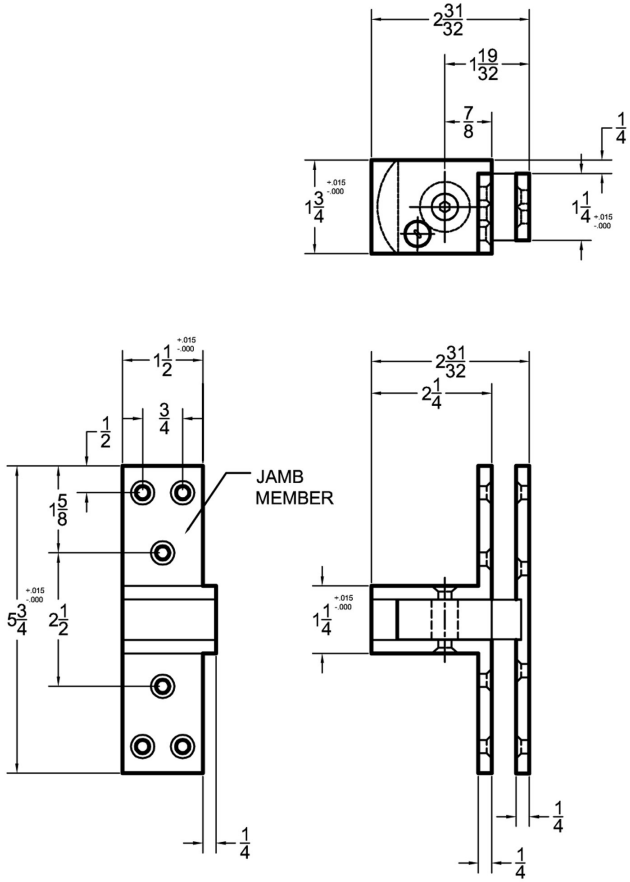

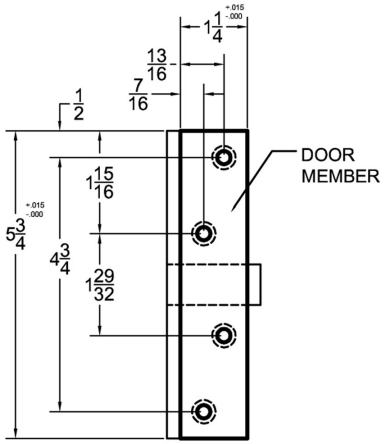

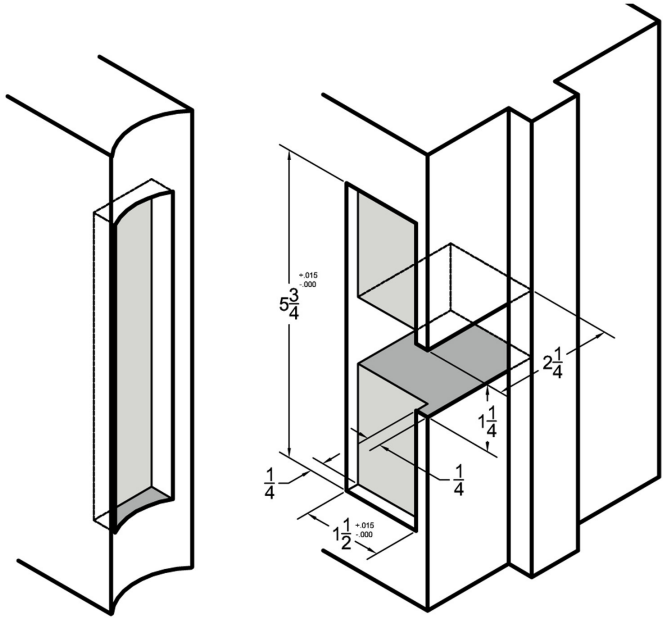

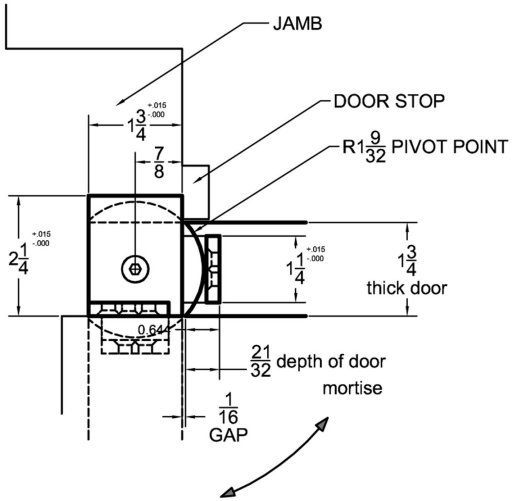

Door Hardware

(914) 747-5462
BY NICHOLAS
nick@doorhardwarebynicholas.com

Harmon Hinge - 1 3/4” Thick Door

T-ALH.HAR.134